TERMINATION LUGS

BI METALLIC LUGS LV

Aftec bimetallic lugs manufactured from alumnium alloy and solid copper. The palm is manufactured with forged copper. The two parts of the bi metals are joined through a friction welding process. The cross sectional area of the annulus and the lenght of the barrel are designed to assure an extremely reliable electrical connection.

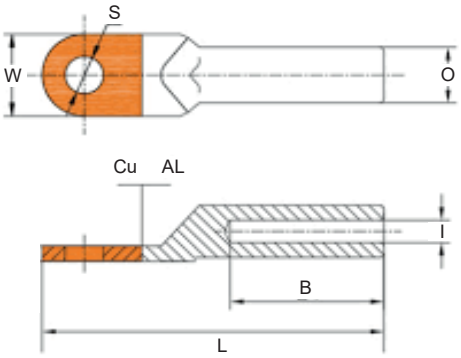

Technical Data	
Material	Copper / Aluminium
Voltage	1000 V

* Technical Information is Subject to change without notice.

MODEL NO.	WIRE RANGE		DIMENSIONS (mm)					
	mm	AWG	S	L	B	W	I	O
ABMT 10 LV	10	8	8.5	68	28	13	6	10
ABMT 16 LV	16	6	8.5	70	30	14	6	11
ABMT 25 LV	25	4	8.5	75	34	16	7	12
ABMT 35 LV	35	2	10.5	85	38	18	8.5	14
ABMT 50 LV	50	1/0	10.5	90	40	20	9.8	16
ABMT 70 LV	70	2/0	12.5	102	48	22	11.5	18
ABMT 95 LV	95	3/0	12.5	112	50	25	13.5	21
ABMT 120 LV	120	4/0	14.5	120	53	27	15	23
ABMT 150 LV	150	300 MCM	14.5	126	56	32	16.5	25
ABMT 185 LV	185	350 MCM	16.5	133	58	36	18.5	27
ABMT 240 LV	240	500 MCM	16.5	140	60	34	21	30
ABMT 300 LV	300	600 MCM	21	160	65	38	23.5	34
ABMT 400 LV	400	750 MCM	21	170	70	42	27	38
ABMT 500 LV	500	1000 MCM	21	225	75	52	29	47
ABMT 630 LV	630	1235 MCM	21	245	80	58	35	54
ABMT 800 LV	800	1580 MCM	21	270	90	64	38	60
ABMT 1000 LV	1000	1975 MCM	21	290	100	76	42	72

*Tolerance Dimension (mm): Length - ±0.50 to 1.00., Width - ±1.25 to 0.75, Thickness - ±0.50 to 0.25
*Custom Sizes can be developed upon request