# TERMINATION LUGS

## BI METALLIC LUGS HV

Aftec bimetallic lugs manufactured from alumnium alloy and solid copper. the palm is manufactured with forged copper. The two parts of the bi metals are joined through a friction welding process. Incorporates neatrul grease at cable entry side with an end cap to avoid aluminium oxidation

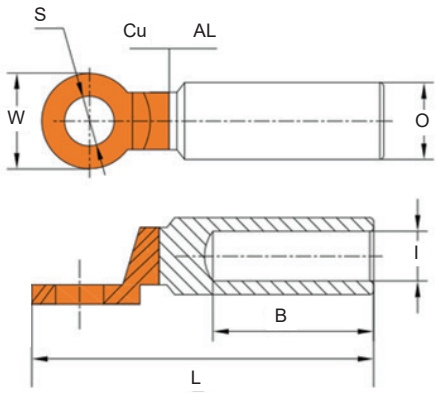


| Technical Data | |
|---|---|
| Material | Copper / Aluminium |
| Voltage | 33 KV |

* Technical Information is Subject to change without notice.

| MODEL NO. | WIRE RANGE | | DIMENSIONS (mm) | | | | | |
|---|---|---|---|---|---|---|---|---|
| | mm | AWG | S | L | B | W | I | O |
| ABMT 10 HV | 10 | 8 | 13 | 70 | 38 | 14 | 5.5 | 14 |
| ABMT 16 HV | 16 | 6 | 13 | 87 | 42 | 14 | 5.5 | 16 |
| ABMT 25 HV | 25 | 4 | 13 | 87 | 42 | 16 | 6.5 | 16 |
| ABMT 35 HV | 35 | 2 | 13 | 87 | 42 | 18 | 8 | 16 |
| ABMT 50 HV | 50 | 1/0 | 13 | 87 | 43 | 20 | 9 | 20 |
| ABMT 70 HV | 70 | 2/0 | 13 | 87 | 43 | 22 | 11 | 20 |
| ABMT 95 HV | 95 | 3/0 | 13 | 87 | 43 | 25 | 12.5 | 20 |
| ABMT 120 HV | 120 | 4/0 | 13 | 111 | 60 | 27 | 13.5 | 25 |
| ABMT 150 HV | 150 | 300 MCM | 13 | 111 | 60 | 32 | 15.5 | 25 |
| ABMT 185 HV | 185 | 350 MCM | 13 | 116 | 60 | 36 | 17.5 | 32 |
| ABMT 240 HV | 240 | 500 MCM | 13 | 116 | 60 | 34 | 19.5 | 32 |
| ABMT 300 HV | 300 | 600 MCM | 13 | 120 | 62 | 38 | 22.5 | 34 |
| ABMT 400 HV | 400 | 750 MCM | 16 | 120 | 75 | 42 | 26 | 34 |
| ADMT 500 HV | 500 | 1000 MCM | 16 | 140 | 85 | 52 | 28 | 48 |
| ABMT 630 HV | 630 | 1235 MCM | 16 | 180 | 100 | 58 | 34 | 48 |
| ABMT 800 HV | 800 | 1580 MCM | 16 | 200 | 125 | 64 | 37 | 70 |
| ABMT 1000 HV | 1000 | 1975 MCM | 16 | 240 | 145 | 76 | 41 | 85 |

*Tolerance Dimension (mm): Length - ±0.50 to 1.00., Width - ±1.25 to 0.75, Thickness - ±0.50 to 0.25
*Custom Sizes can be developed upon request